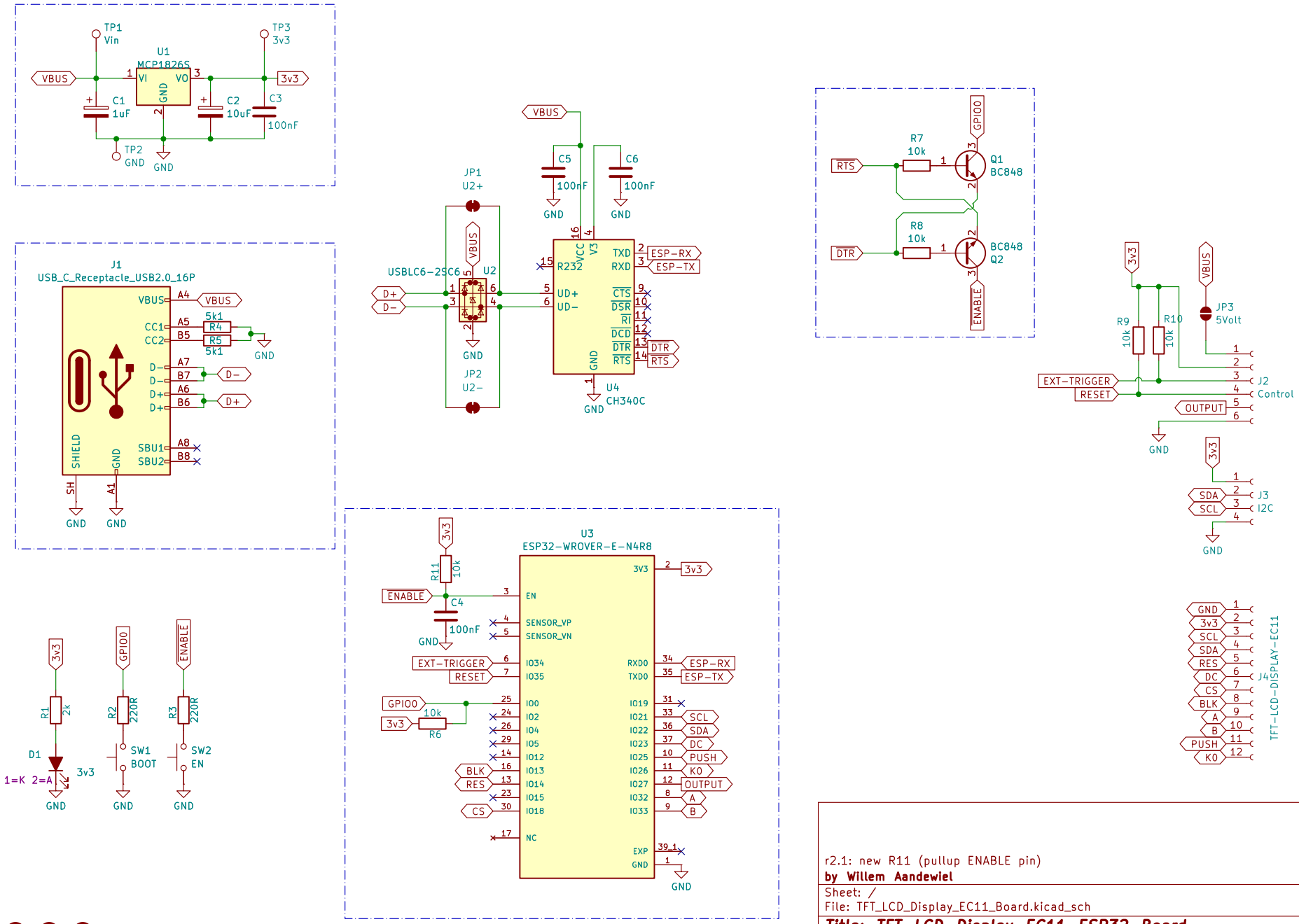

r2.1: new R11 (pullup ENABLE pin)

by Willem Aandewiel

Sheet: /

File: TFT_LCD_Display_EC11_Board.kicad_sch

Title: TFT LCD Display EC11 ESP32 Board

Size: A4	Date: 2026−05−16	**Rev: r2.1**
KiCad E.D.A. 10.0.2		Id: 1/1